High Voltage Nanosecond MOSFET Driver

PRIFYSGOL BANGOR UNIVERSITY

Grŵp Ymchwil Systemau MICRODON MEDDYGOL
MEDICAL MICROWAVE Systems Research Group

KHALID ALYAFEI

SUPERVISOR: ILAN DAVIES

State of Qatar

Abstract

Tumour and cancer treatment by diverse ways such as irreversible electroporation, and electro- chemotherapy require high voltage short period pulses. The pulse duration goes from 100ns-1µs according to the application. To achieve these specifications, a high voltage nano- second pulse generator circuit is to be designed using MOSFET technology. The designed circuit is implemented and simulated in LTSpice simulation software. The desired output of the circuit is a pulse of 1KV and 100µs width. The implemented circuit is to be a fundamental use in biomedical applications and could be modified to have variable pulse width and amplitude voltage according to the applications.

Objective

The objective of this project is to design and simulate a nanosecond pulse generator. This generator uses the MOSFET technology with pulse period from 100ns-1µs with repetition rate from 1 to 50Hz.

Design

The circuit design is a push-pull configuration of high power Silicon Carbide (SiC) MOSFETs, C2M1000170D, interpretating a high voltage supply, creating a high voltage nanosecond pulse across a load.

Simulation circuit

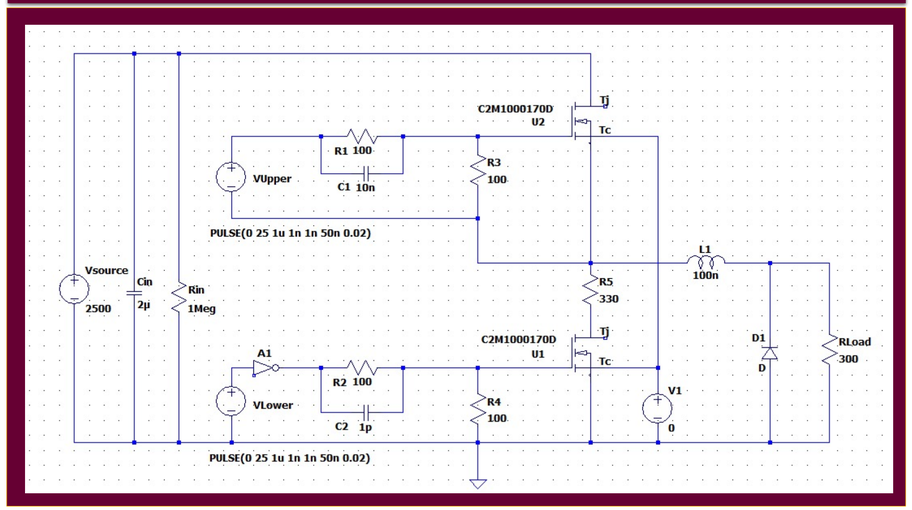

Simulation Resulted Pulse

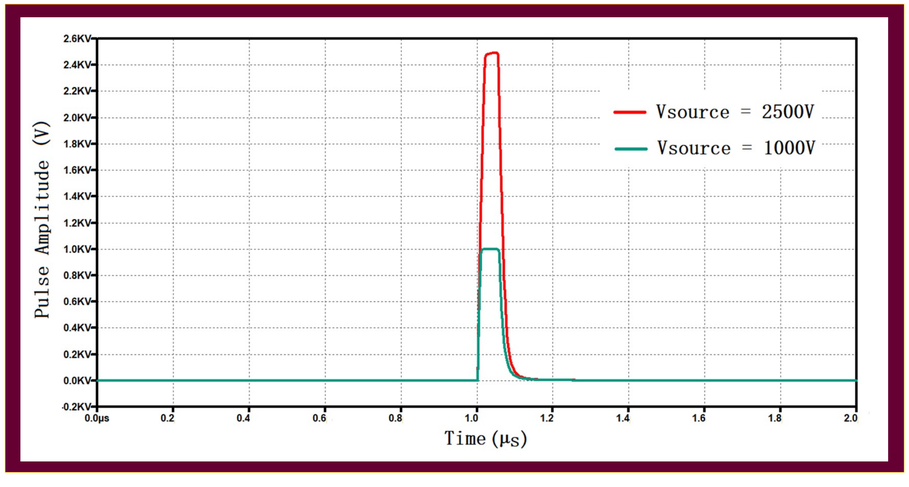

Future work

Further improvement of the circuit is may carry by implementing a stack MOSFET to increase pulse amplitude and to produce a bipolar pulse.

Operation

The upper MOSFET (U2) is switched ON, it provide the load with the voltage of the supply (1.4 kV – 2.5kV). The switching mechanism of this MOSFET determines the pulse duration.

The lower MOSFET (U1) provides a fast discharging path for the load, producing a fall time identical to it rise time.

Circuit Block Diagram

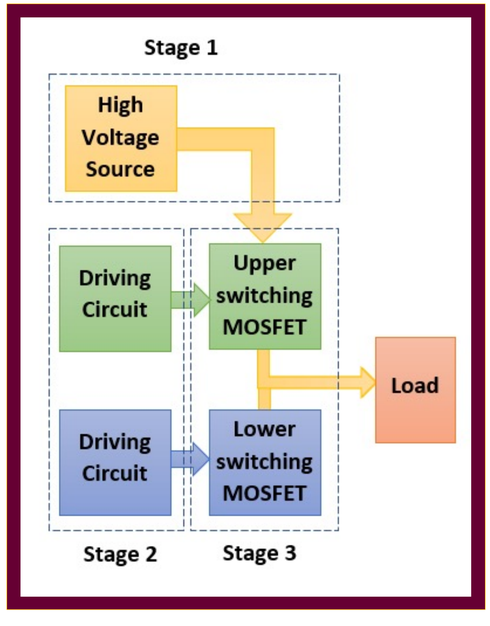

References

[1] I. W. Davies *et al.,* "Push–pull configuration of high-power MOSFETs for generation of nanosecond pulses for electropermeabilization of cells," *International Journal of Microwave and Wireless Technologies*, vol. 11, no. 7, pp. 645-657, 2019

[2] Guy Moxey "Modelling common topologies with Wolfspeed Silicon Carbide MOSFETs" *Wolfspeed*. 2020.